PSPICE SIMULATIONS FOR PERFORMANCE TESTING OF SIGNAL CONDITIONING CIRCUIT FOR LDR

A.V. Mancharkar

Head, Dept. of physics, New Arts, Commerce and Science College, Parner 414302, INDIA

Email: mancharkar_av@rediffmail.com

Abstract

This paper addresses performance of signal conditioning circuit for LDR as an example. In reality the circuit has to simulate over the specified operation ranges. The circuit simulations are performed by experimenting various resistance values in the test circuit. The circuit output voltage performance is measured up to 3-decimal point accurately. The low cost, fast simulation techniques for the linearity and an accuracy of the circuit performance and reliability is reported by using the Pspice test tools. The results are explored with browsing output data facility and run probe analysis.

Keywords: signal conditioning circuit

1. Introduction

The evolution of process control has seen the infusion of electronics technology into almost every facet because of low cost, reliability, miniaturization, and ease of interface. Using the signal conditioning circuits the direct transudation of any physical parameter is converted into the required output signal. The specific type of signal conditioning depends, of course on the type of sensor employed as well as the nature of the specified output signal characteristic [1]. The electronic industry is getting progressively more and more efficiently at developing new products in wide ranges and variety of sensor applications to the customer. We also see more and more products coming into the market with shorter and shorter product lives or some time they may fatal at times [2]. Hence, low cost circuit design, with an accurate, linear and faster testing technique is addressed.

A variety of sensors are commercially available, however, signal conditioning plays an important role in design and development of accurate circuit performance and optimum reliability. Here, practically the product has to design first and then tested for its intended

results, but if any degradations in the output signal is found, circuit parameters and values have to be replaced and circuit is re-tested for improved performance. This whole process is repeated several times to obtain the desired performance and low drift in specified parameters over the operating range. To complete one such process involve large amount of time, high cost and accurate component values. This critical problem of product design and testing is simplified by use of PSpice simulations. This allows user to design, test, and perform various analysis to optimize the accuracy, circuit performance and its reliability before the actual product is made [3].

2. Simulation concepts

Electronic Simulation of circuit function is now a common practice in the design both of individual circuits and complete systems. The more of the circuit a designer can simulate, the faster the circuit can get into production and hence to market. Dr. Lawrence Negal at University of California, Berkeley, originally developed PSPICE, It is a general-purpose circuit simulator program that simulates electronic circuits. It performs various types of analysis of electronic circuits. PSPICE contains models for common circuit elements, active as well as passive, and it is capable of simulating most electronic circuits. It is a versatile program and is widely used both in industries and universities [4].

PSPICE (PC Version, Simulation Program with Integrated circuit Emphasis) has become a common tool for analogue simulations and widely used, even for some mixed mode circuit designs [5]. It allow the designer to construct entirely new circuit without fabricating the actual circuit using hard wires, components and PCBs. The circuit performance and its reliability in any circuit, to minimize failure, can be tested. To meet the required standards of a circuit and hence quality instrument, the circuit analysis is performed. In case of any failure or problems observed, one can easily redesign it by modifying the very same circuit in few minutes using highly sophisticated simulation tools. With adequate number of design and redesign iterations on a computer platform where it consumes only a small amount of time and no material, the design can be made robust. The simulated circuit can then be subjected to different analysis *i.e.* actual tests. The performance and reliability of circuit and instrument definitely shows results of up most levels. Thus it is the faster and low cost and less cumbersome process [3].

To test and analyze the circuit performance first set the circuit for initial conditions such as zero and span adjustments using pots RPT1 and RPT2 as shown in the circuit diagram in **Fig.1** for LDR. Spice simulations and testing process is as follows.

- Drawing the circuit
- Selecting the type of analysis
- Simulation of the circuit
- Displaying the results of the simulation

The Design Center software package has three major interactive programs: *Schematics,Spice,* and *Probe.* Schematics are a powerful program that let's you build circuits by drawing in a window on the screen. Spice analyzes the circuits created by schematics and generates voltage and current solutions. Probe is a graphics post-processor that allows you to display plots of parameters such as voltage, current, impedance, and power [6].

3. Signal Conditioning Circuit for LDR

Photo resistors are semiconductor light detectors without a PN junction. Their resistance is very high when no light is present. When illuminated, their resistance is very low; it goes as low as several hundreds of ohms. They are commonly used in light controlled relays and light meters [7]. The photo resistor is also an important device in *fiber optic communications*.

This section describes signal conditioning circuit for widely used light dependant resistive sensor i.e. LDR. Light sensitive signal conditioning circuit is used for simulating and testing the circuit performance as a function of discrete values of resistive components. The dark resistance of LDR has maximum value. The resistance of LDR decreases with increases in the intensity of light falling upon it. The signal conditioning circuit is used to convert a change in LDR resistance into output voltage in millivolts. An opamp is used in inverting amplifier configuration as shown in **Fig.1.** The relationship between output voltage and simulated input resistance is expected to be linear.

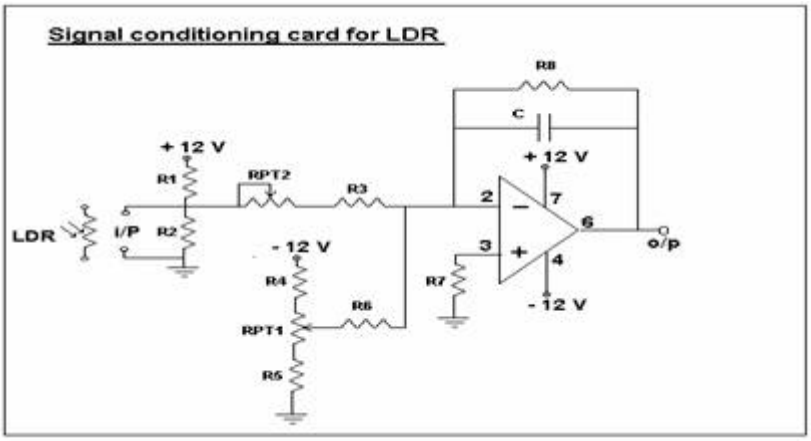

Fig.1 *Signal Conditioning Circuit for LDR.*

4. Results and Discussions

The simulation of typical LDR signal conditioning circuit is carried out successfully. The performance dependence characteristics on the resistance value is shown in **Fig.2.**for a LDR of 10K value. The resistance value is swept in the range of 0 to 10k ohm in step of 100 ohm. This paper reports that as LDR resistance decreases from 10K value the output voltage of signal conditioning circuit falls linearly from 1V to finally almost 0V. But LDR is a nonlinear device so practically this relationship will be nonlinear.

Since Spice is the industry standard for electronic circuits simulations, it is used extensively for the design of other sensor signal conditioning circuits such as pressure, flow, displacement, force, vibration, etc. in sensor design and applications as the new product. Also these simulation studies are uniformly may be applied for testing the circuit performance and reliability under changing physical conditions under which they are operating before actual circuit or product is made.Hence it avoids the complex, cumbersome, cyclic testing procedures for a newly developed product [8].

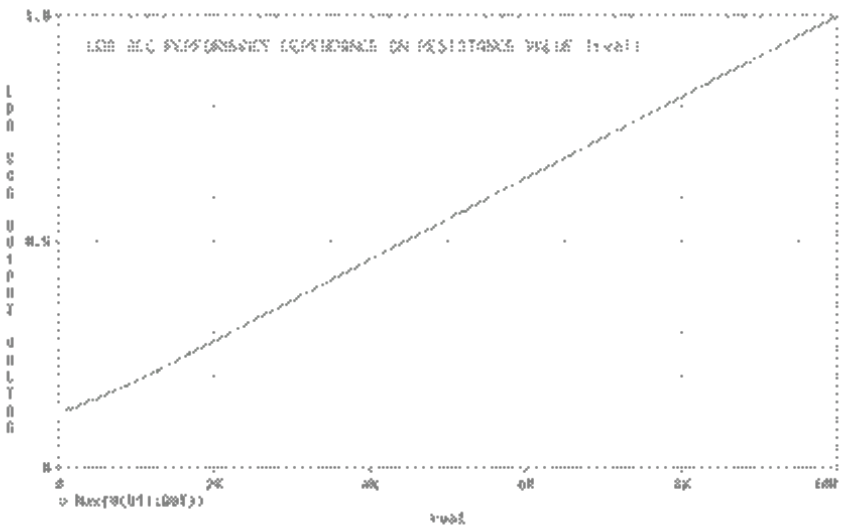

Fig.2

5. Acknowledgement

The author (AVM) wishes to thank the Management and Principal of the N.A.C.& College, Ahmednagar and Head of the Department of Physics, B.A.M. University of Aurangabad for allowing the use of facilities.

References

[1] Murty D V S," Transducers And Instrumentation" (Printice Hall of India, New Delhi), 1995.

[2] A.E. Ward, A.S. Angus, " Electronic Product Design", Chapman & Hall Oxford, 1996.

[3] Walunj A K, Mancharkar AV and Shaligram AD, *PSpice Simulations for performance and reliability testing of sensor signal conditioning circuits*, J. Instrument. Soc. India(2001), 30(20),pp-65-74.

[4] Paul W. Tunenga, SPICE: A guide to circuit simulation and analysis using PSPICE, Englewood Cliffs N.J. USA:Prientice Hall 1998.

[5] Martin O′ Hara, Modeling board-level DC-DC converts in SPICE (Electronic Product Design), July 1998.

[6] Mancharkar A.V and Behere S.H., *PSpice Simulations for performance testing of Signal Conditioning Circuits for Resistive Temperature Sensors*, Proceedings (section of physical sciences) of 91st The Indian Science Congress, Chandigarh, 2004, pp 41-42.

[7] Girgirah F.H. and Shaligram A.D., *Design Fabrication and Characterization of Silicon MSM Photo Resistors*, Proceedings of 9th NSPTS , University of Pune, 2-4 March, 2002, p14.1.

[8] Walunj A K, Mancharkar AV and Shaligram AD, *Temperature Sensors SCC PSpice performance and reliability testing due to resistive tolerances and effects*, Proceedings of 7th NSPTS , University of Pune, 14-16Feb, 2000, p50.1-50.6.